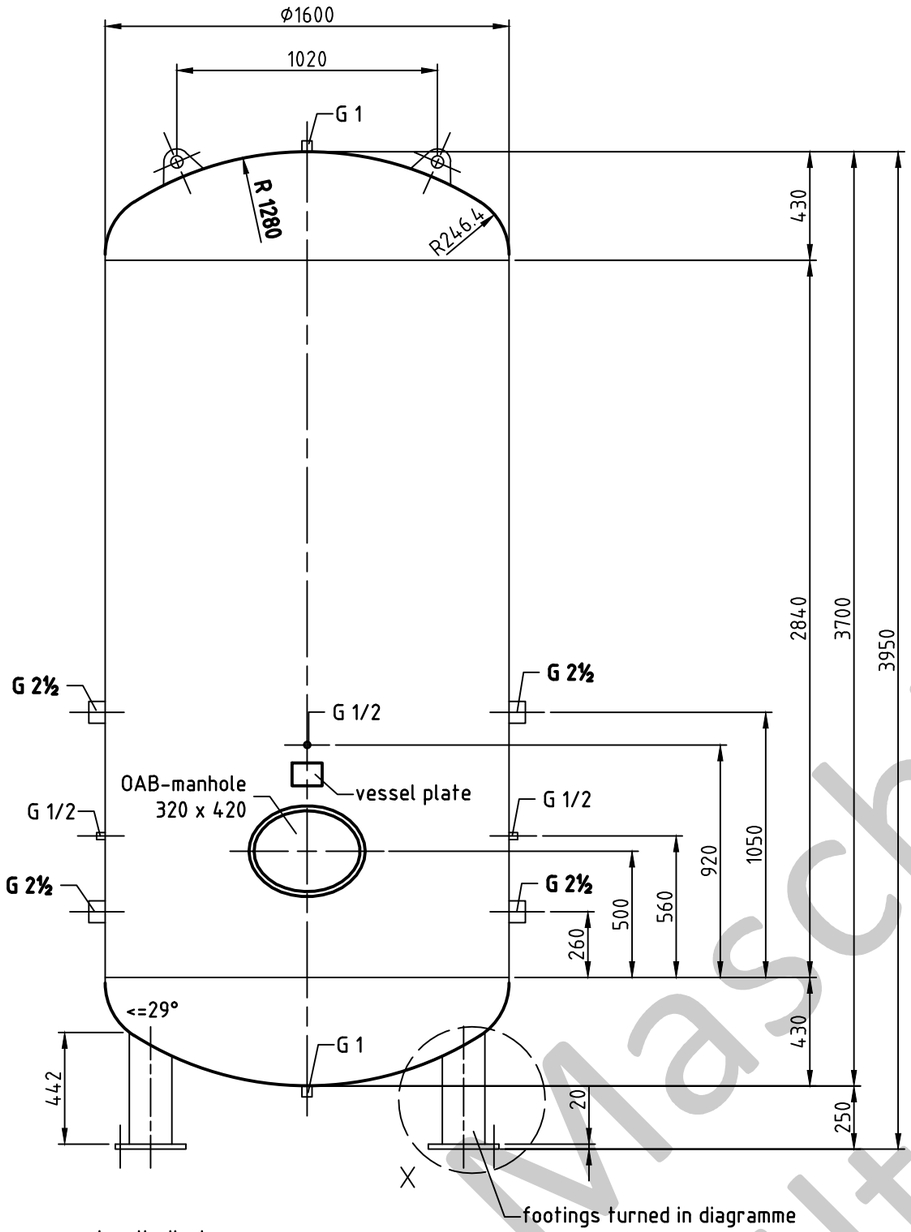

OAB 51 - manhole lock 320/420
tested components

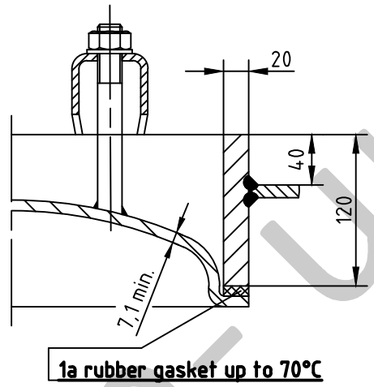

Detail X

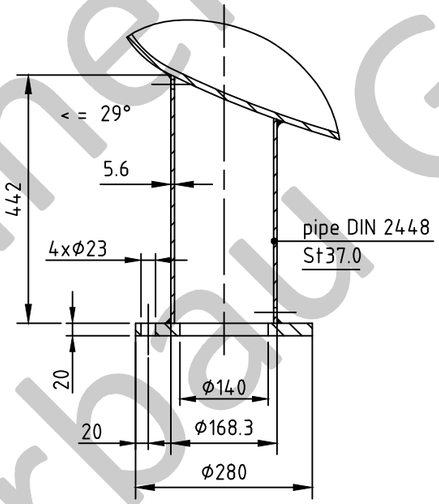

socket welding

drain and plug socket
inside flush

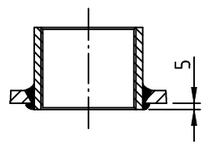

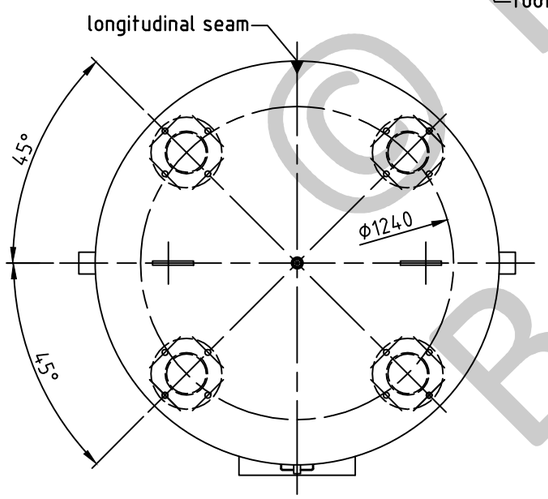

carrier eye

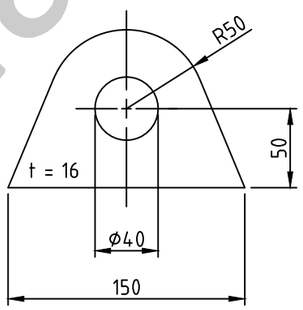

seams (unless otherwise indicated on drawing):

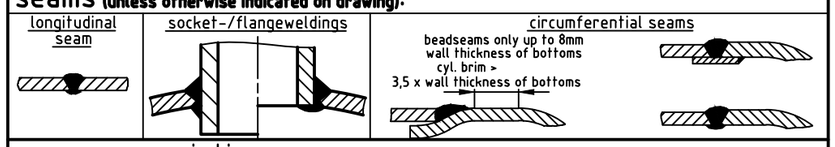

pressure variation :

pressure swing 0-11 bar max. operations 1.000
infinite operation of pressure swing within 20% of 11 bar

operational characteristics / calculation characteristics :

volume V (litre)	:	7000
max. working pressure PS (bar)	:	11
test pressure PT (bar)	:	15,73
min. working temp. TS (°C)	:	-10
max. working temp TS (°C)	:	50
fluid	:	compressed air / nitrogen (fluid group 2)
location	:	inside and outside building possible

coating :

inside : raw
outside : primed (if costumer wishes lacquered)

manufacturing and testing

acc. to PED 2014 / 68 / EU - AD 2000

conformity benchmark :

fluid group : 2 | categorie : IV
diagram : 2 | module : H1

scale :	1:25
our no. :	-
order no. :	-
used for :	M+B Standardvessel
weight :	ca.1320 kg
sheet :	1
of sheet :	1
date of plot :	15.06.2015
file :	ENG-010709

Maschinen- und Behälterbau GmbH

	date	name
compl.	15.06.2015	CW
appr.	15.06.2015	

follow protection mark acc. to DIN 34

Betzdorfer Str. 170
57567 Daaden
Tel. 02743/9330-12
Fax 02743/3685
Internet: www.mabe.de
E-Mail: cad@mabe.de

description :

pressure vessel upright
7000 l 11 bar

drawing no. : MB 020103-1.7000G/E

revision : A

date of revision : 15.06.2015

drawing no. of design inspection : MB 020103-1

revision only on CAD

© Maschinen- und Behälterbau GmbH