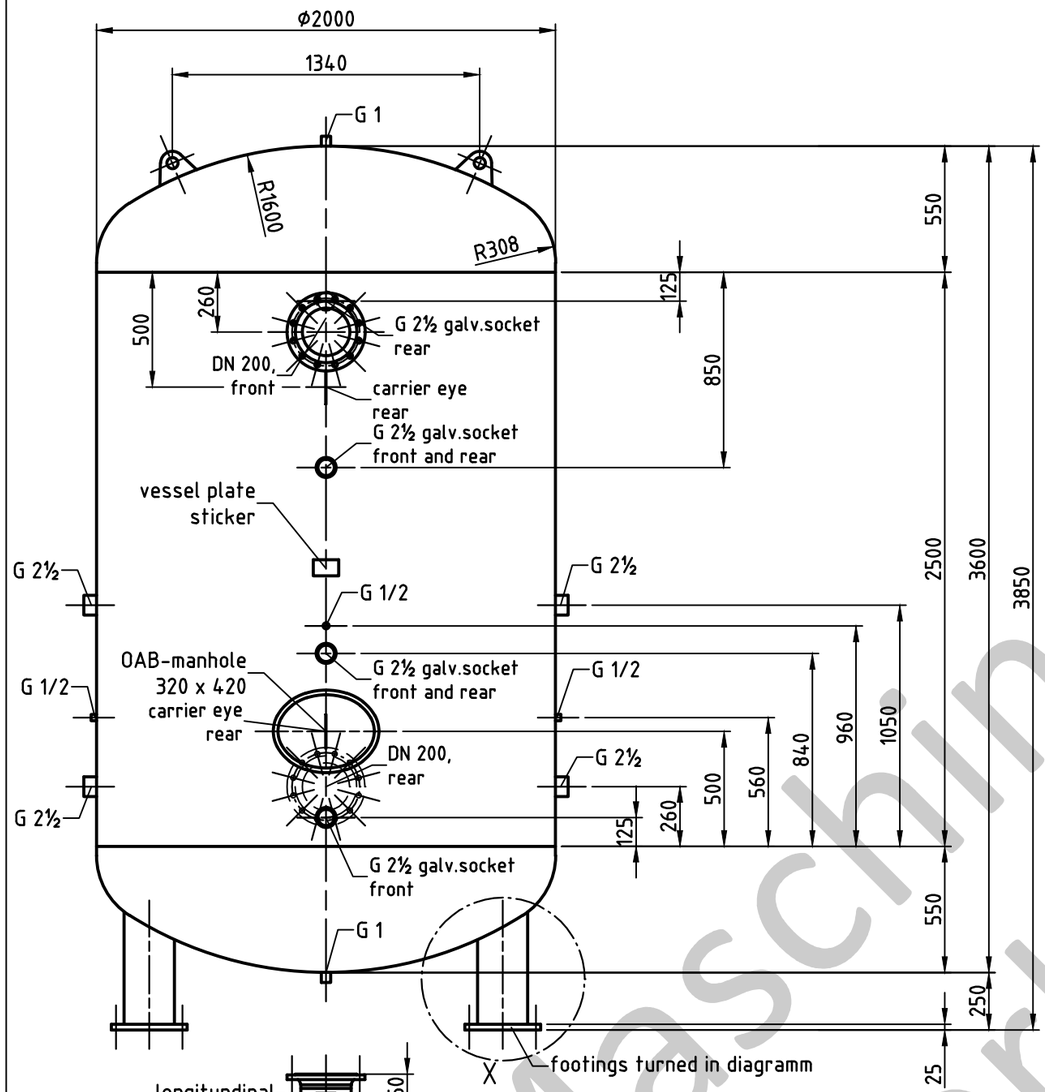

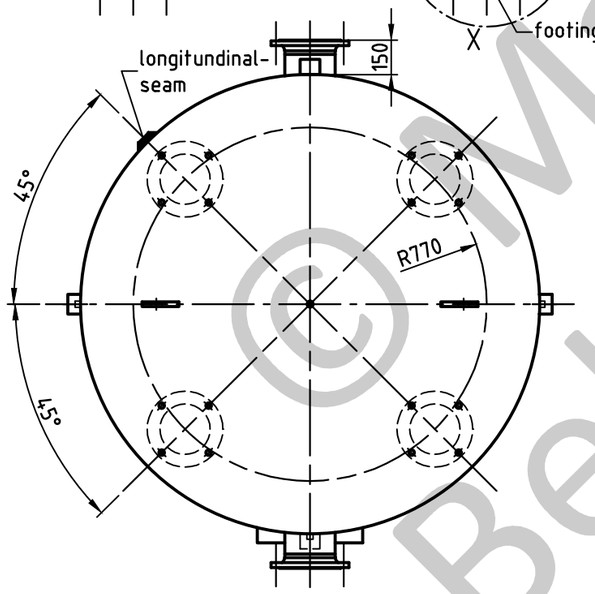

OAB 51 - Manhole lock 320/420
tested component

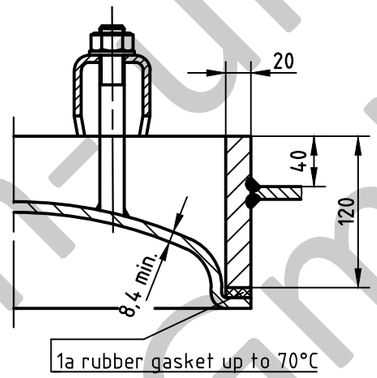

Detail X

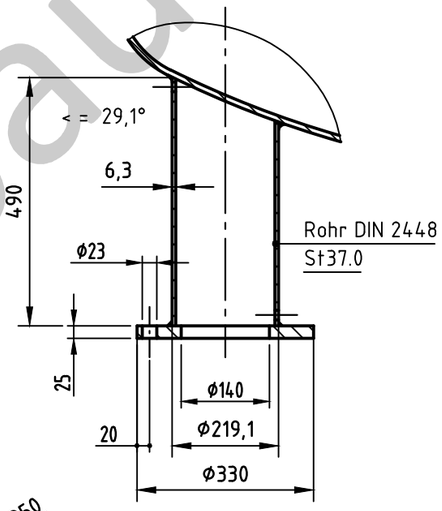

carrier eye

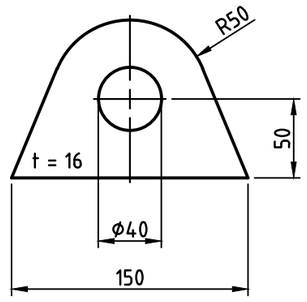

socket welding
drain and plug socket
inside flush

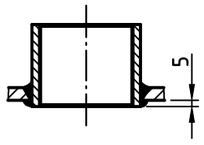

seams (unless otherwise indicated on drawing):

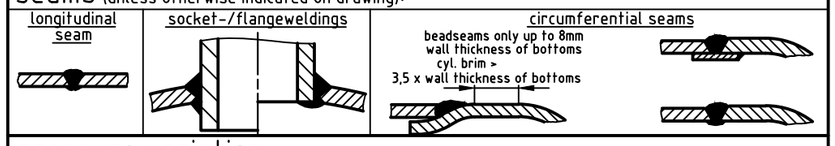

pressure variation :

pressure swing 0-PS bar max. operations 1.000
infinite operation of pressure swing within 20% of PS bar

operational characteristics / calculation characteristics :

volume V (litre)	:	10000
max. working pressure PS (bar)	:	16
test pressure PT (bar)	:	22,88
min. working temp. TS (°C)	:	-10
max. working temp TS (°C)	:	50
fluid	:	compressed air / nitrogen (fluid group 2)
location	:	inside and outside building possible

coating :

inside : hot-dip galvanized
outside : hot-dip galvanized

manufacturing and testing

acc. to PED 2014 / 68 / EU - AD 2000

conformity benchmark :

fluid group : 2
diagram : 2
categorie : IV
module : H1

scale :	1:27.5
our no. :	-
order no. :	-
used for :	M+B Standardvessel
weight :	ca.2860 kg
sheet :	1
of sheet :	1
date of plot :	06.05.2015
file :	ENG-010772

Maschinen- und Behälterbau GmbH

	date	name
compl.	22.06.2015	CW
appr.	22.06.2015	

follow protection mark acc. to DIN 34

Betzdorfer Str. 170
57567 Daaden
Tel. 02743/9330-12
Fax 02743/3685
Internet: www.mabe.de
E-Mail: cad@mabe.de

description :

pressure vessel upright
10000 l 16 bar

drawing no. :
MB 020103-2.10020V/E

revision : A

date of revision :

drawing no. of design inspection :
MB 020103-2

revision only on CAD

© Maschinen- und Behälterbau GmbH